CATALOG NO. 50A

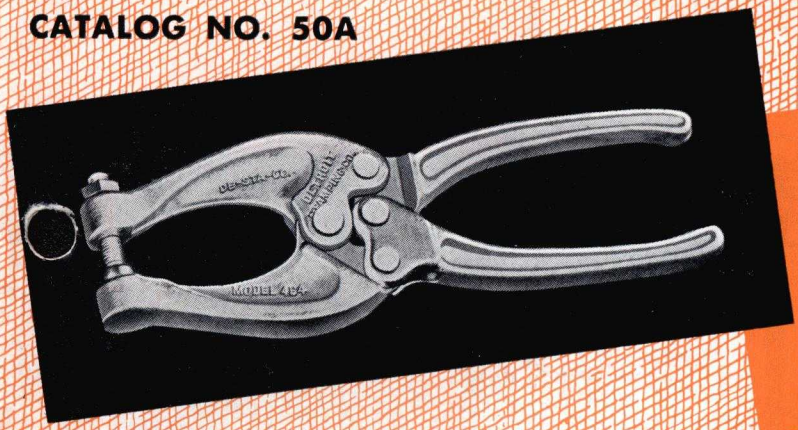

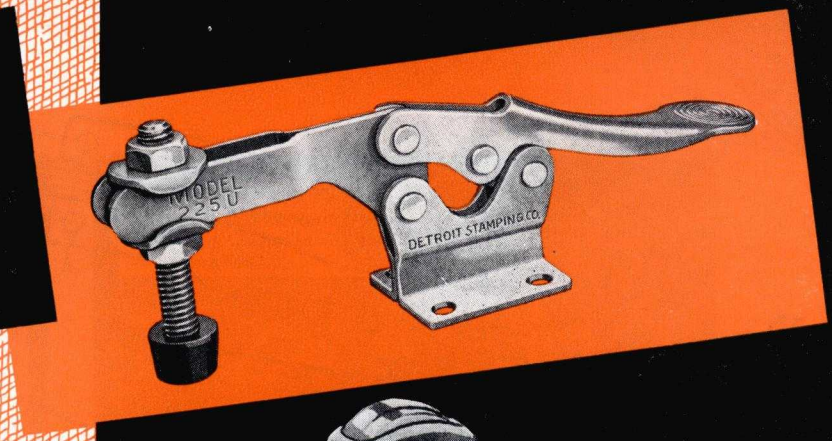

HOLD *Everything*

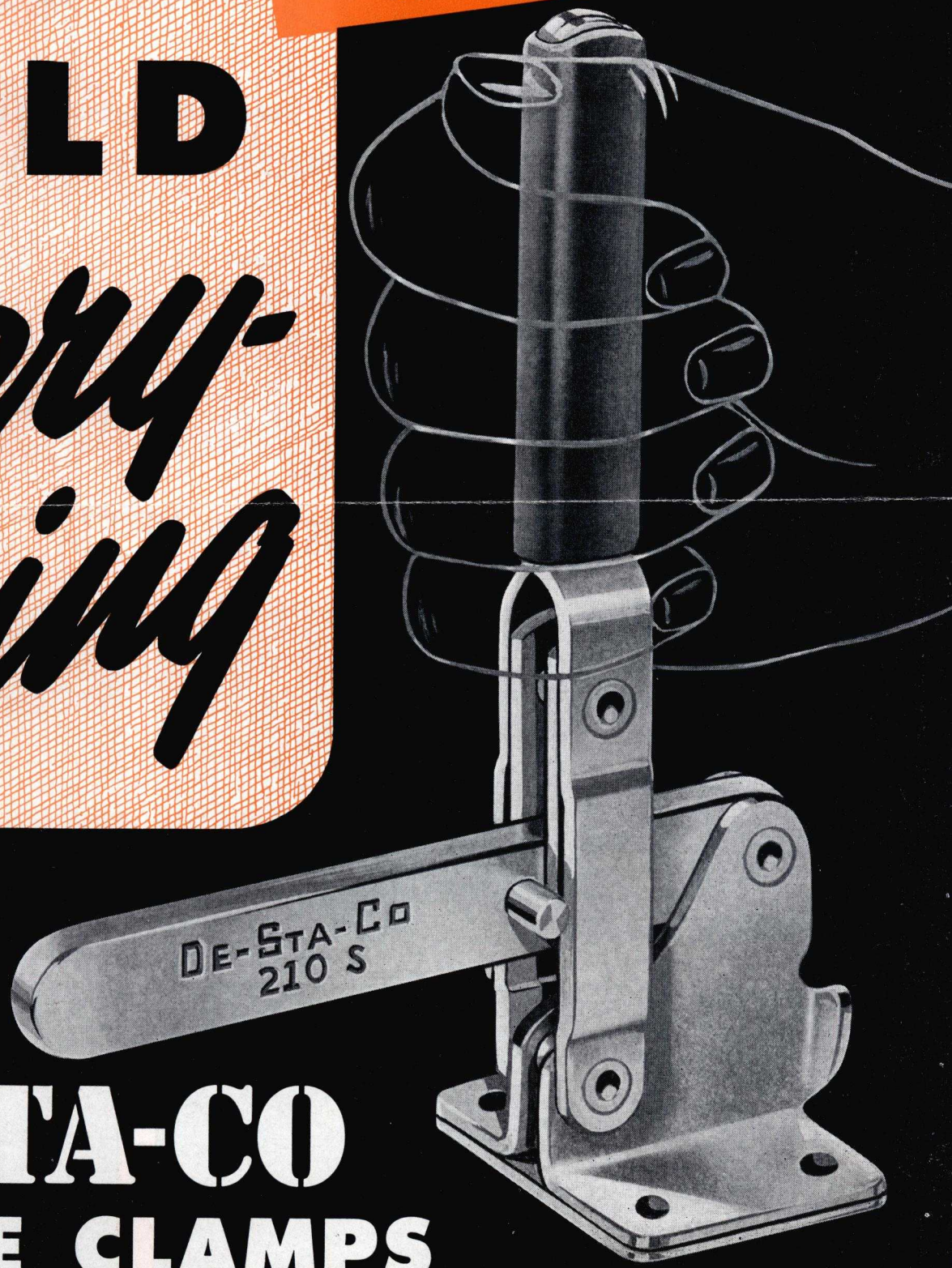

with

DE-STA-CO TOGGLE CLAMPS

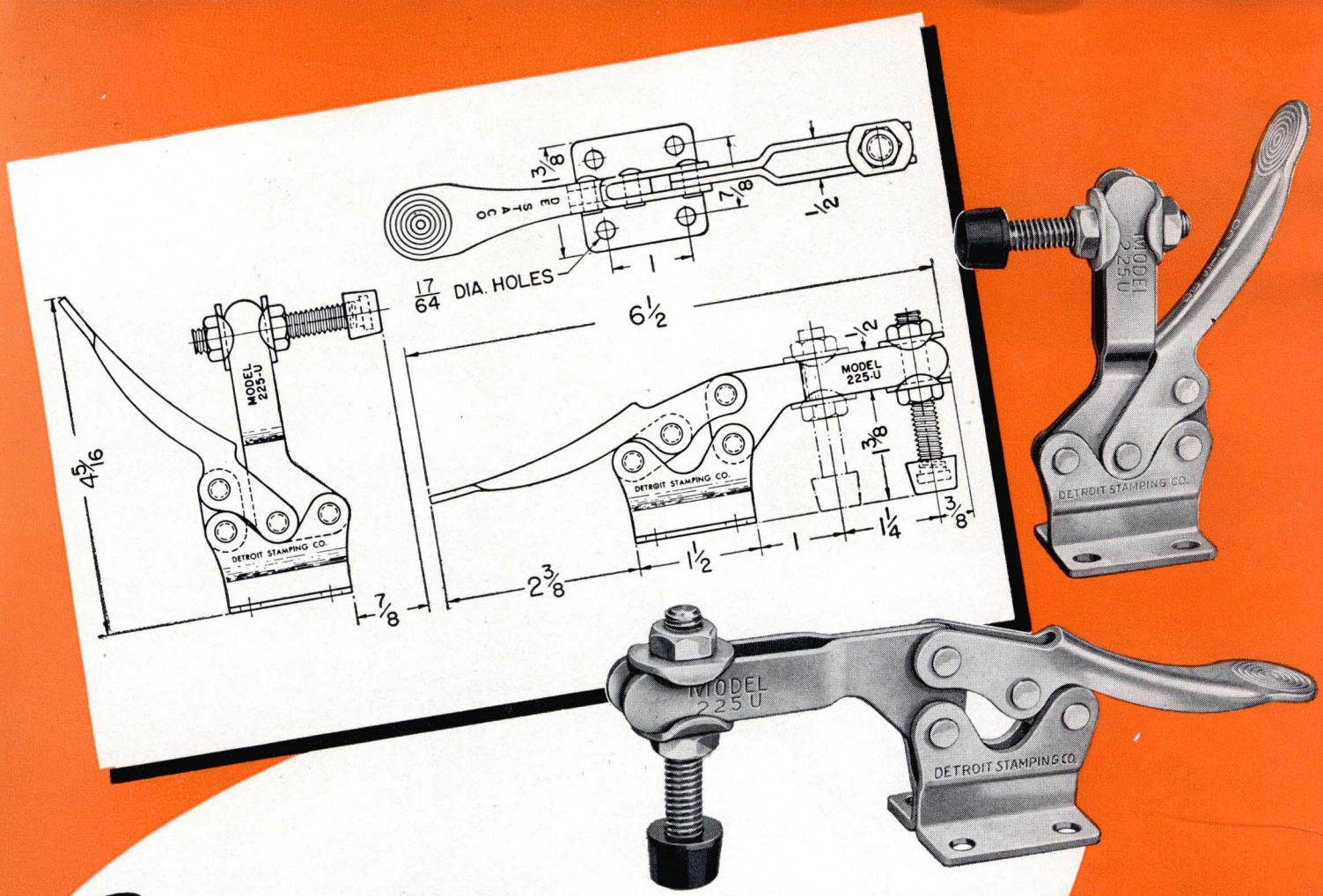

Speed Production With This New DE-STA-CO Toggle Clamp

This new De-Sta-Co Model 225-U Toggle Clamp speeds machining, inspection, assembly, welding and many other operations.

Smooth, fast, powerful action clamps parts quickly . . . holds them firmly in perfect alignment . . . releases rapidly. Clamping bar retracts to fully vertical position away from work, allowing maximum clearance for quick removal of finished work piece and insertion of new one. Rubber tipped bolt assembly is adjustable both horizontally and to work height to simplify fixture design.

Other features of this new De-Sta-Co Clamp include stainless steel bearings, reamed working surfaces and rugged, dependable construction. Find out now, how to cut fixture costs and increase your production with the versatile Model 225-U De-Sta-Co Toggle Clamp. Obtain complete information from your local De-Sta-Co representative.

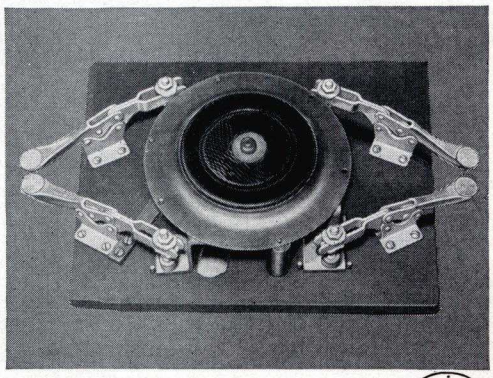

Locates brackets to flange in light, simple spot-welding fixture.

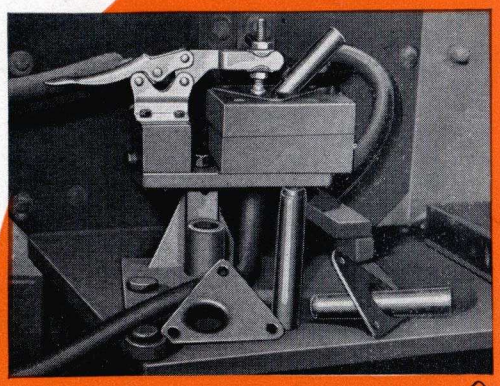

Rapid clamping action—instant precision alignment—mean uniform high production on induction brazing of two-piece assembly.

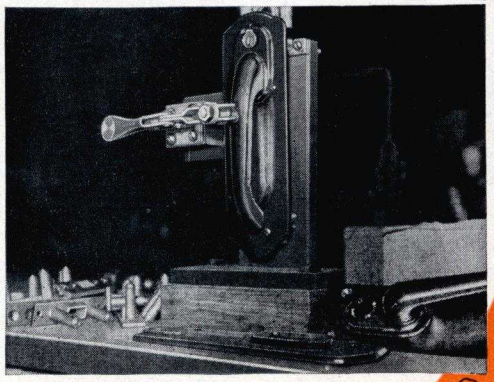

Quickly positions and holds house trailer door lock firmly during assembly and final inspection.

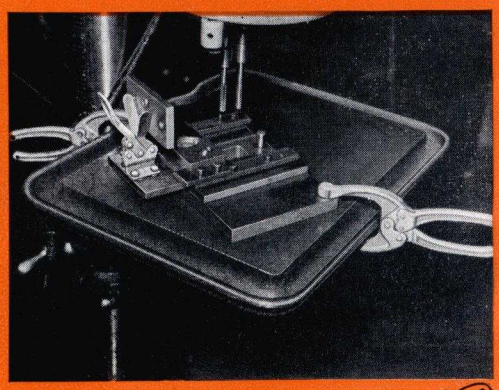

Combination clamping, locating and actuating device on sliding drilling and reaming fixture.

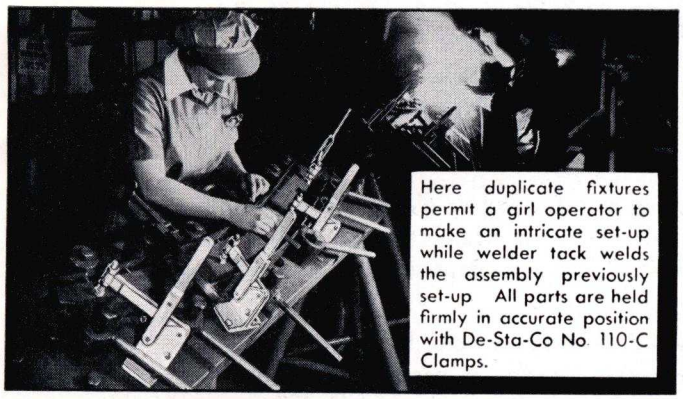

Here duplicate fixtures permit a girl operator to make an intricate set-up while welder tack welds the assembly previously set-up All parts are held firmly in accurate position with De-Sta-Co No. 110-C Clamps.

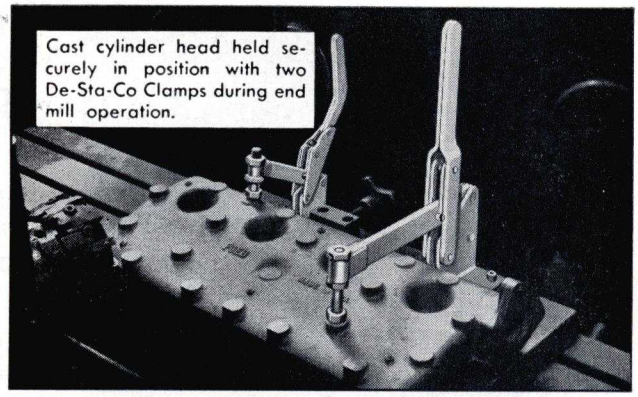

Cast cylinder head held securely in position with two De-Sta-Co Clamps during end mill operation.

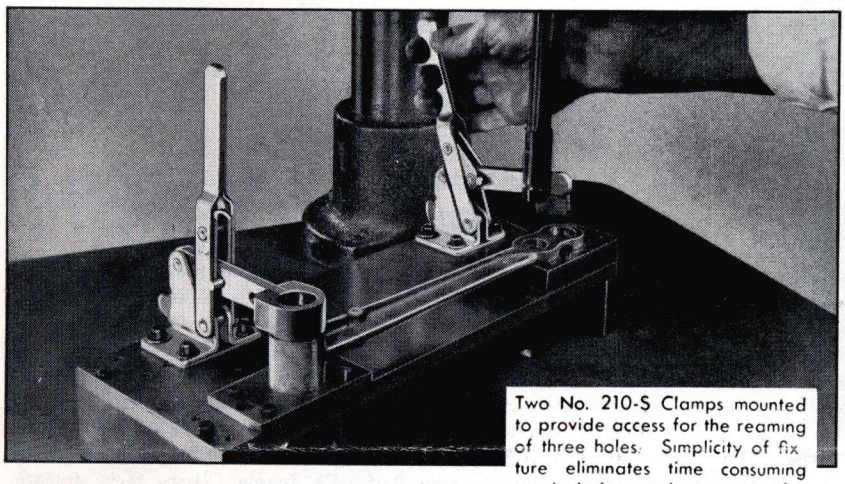

Two No. 210-S Clamps mounted to provide access for the reaming of three holes. Simplicity of fixture eliminates time consuming manipulation and operator fatigue *Above* Loading.

Below. Reaming..

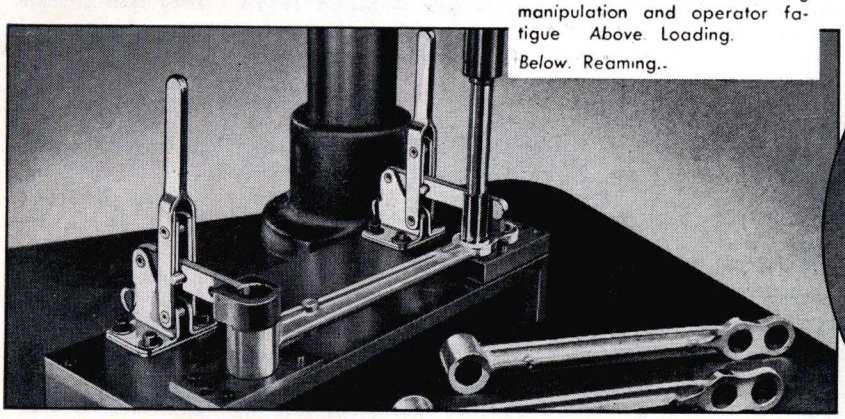

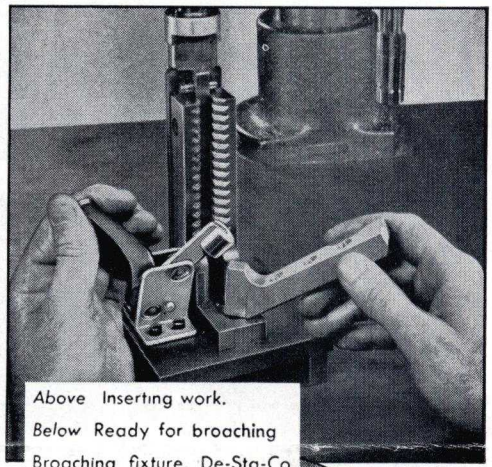

Above Inserting work.

Below Ready for broaching

Broaching fixture, De-Sta-Co No 245 Clamp, holding machine part during broaching operation.

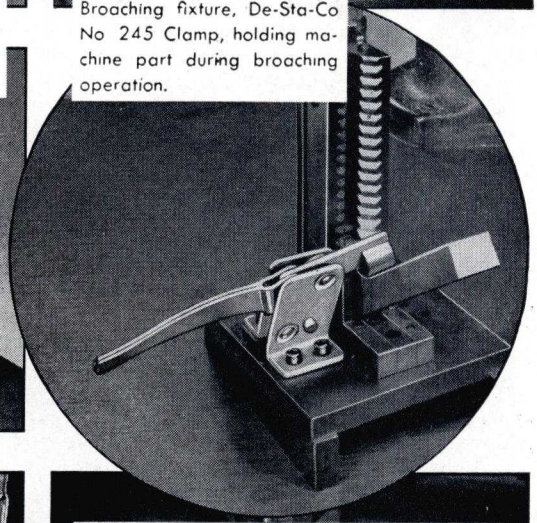

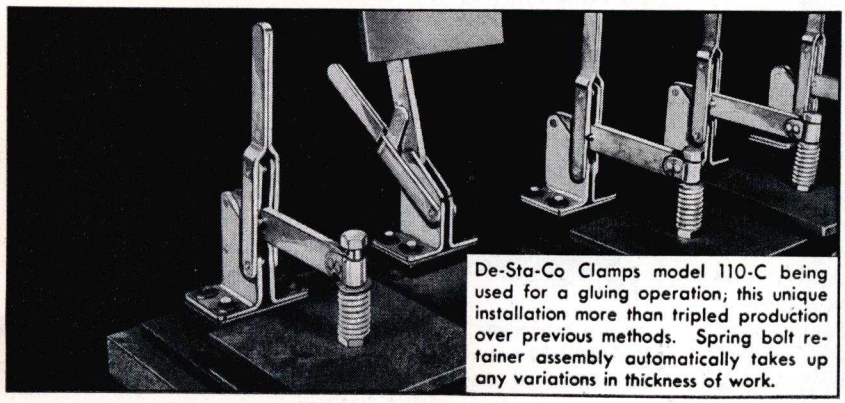

De-Sta-Co Clamps model 110-C being used for a gluing operation; this unique installation more than tripled production over previous methods. Spring bolt retainer assembly automatically takes up any variations in thickness of work.

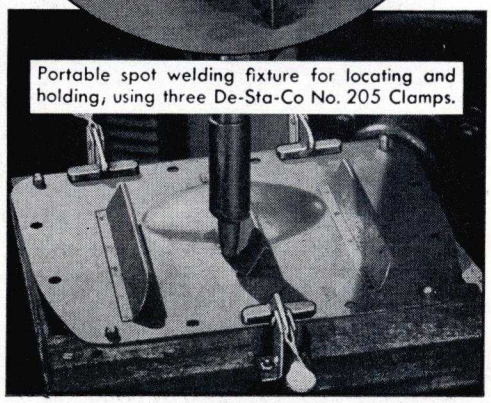

Portable spot welding fixture for locating and holding, using three De-Sta-Co No. 205 Clamps.

DE-STA-CO TOGGLE CLAMPS

For Clamping Parts in Production

If your production operations call for clamping metal, wood or plastic parts—during welding, drilling, riveting, gluing, milling, machining, grinding, sawing, routing or assembly operations—you will find in De-Sta-Co Toggle Clamps a means for swifter and more accurate production.

Through their use the Tool Engineer is enabled to design simple, fool-proof jigs and fixtures—fixtures that assure positive and accurate location of parts . . . that eliminate unnecessary hand motion . . . that require fewer tool-room hours in building.

There is in the De-Sta-Co line a model exactly suited to your needs. It is a complete line—thoughtfully engineered and carefully manufactured by an old established concern.

SPEED, ACCURACY and EASE OF OPERATION

All De-Sta-Co Toggle Clamps are quick-acting, lock automatically and hold firmly. If an operator should fail to nest a part correctly in the fixture or chips should interfere, the De-Sta-Co Clamp will not readily lock into position, thus giving warning before the operation can be performed incorrectly. De-Sta-Co Clamps offer secure clamping and instant release. Removal and insertion of parts is done quickly and easily. Their quick, positive clamping and accuracy combine for greater ease of operation and consequent higher production.

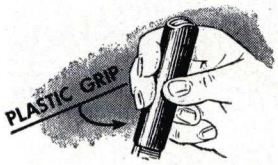

SPEED ASSURED

The normal time for opening or closing a De-Sta-Co Toggle Clamp is less than two seconds. Jigs and fixtures may be so designed that opening the clamp frees the part for quick removal and permits insertion of another part with minimum labor and motion required of the operator. A patented bolt retainer, furnished at no additional cost with each solid bar De-Sta-Co Toggle Clamp, provides fast, accurate angular and height adjustment.

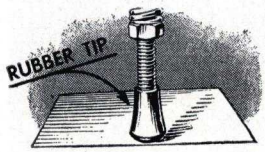

WORK BARS MADE OF SOLID STOCK

All work bars of De-Sta-Co Toggle Clamps are made from one piece, cold drawn carbon steel. There is no danger of their separating under heat of welding or similar jobs. They are dependably engineered to withstand maximum stress and unusual job conditions. Each is designed to swing wide open, eliminating all possibility of interference, for quick and easy insertion or removal of work from the fixture.

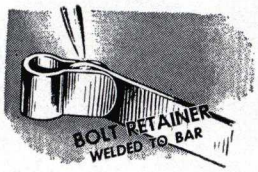

MADE OF TOUGH, COLD DRAWN CARBON STEEL

De-Sta-Co Toggle Clamps are made of cold drawn carbon steel. No ordinary mild steel is permitted. The use of cold drawn steel provides a machine-like finish to working surfaces . . . permits close fitting . . . results in greater smoothness of operation. An added factor to ease of operation is the carefully machine reamed bearing surfaces of the clamps. These things combine to give De-Sta-Co Toggle Clamps their strength and ability to take punishment—to withstand abuses far beyond the normal safety factor.

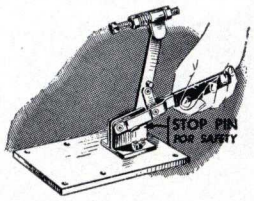

SPECIAL FEATURES

The Plastic Grip, supplied as standard equipment, can be fitted over the handles of most De-Sta-Co Toggle Clamps. It extends the full length of handle . . . provides a positive hand hold. Other special features include a rubber tip for bolt to prevent marring of parts, a T-shape handle which offers a firm grip where limitation of overhead space prohibits use of larger or taller clamps and a self-adjusting portable clamp which eliminates readjusting spacing between spindles. Also, the Pressure-Matic Retaining Bolt assembly to control tension is now available on any Medium or Heavy Duty De-Sta-Co Toggle Clamp—whether portable or fixed.

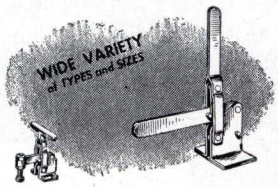

WIDE VARIETY OF TYPES AND SIZES

Detroit Stamping Company provides a type and size of Toggle Clamp for every need—from a midget 1¾" in height to a giant clamp. All of them are engineered and built to most efficiently do the job—to assure you speed, accuracy and ease of operation.

During its 30 years in business the Detroit Stamping Company has pioneered and developed the use of Toggle Clamps now widely used by many and varied industries.

DE-STA-CO TOGGLE CLAMPS

MODELS NO. 202 AND NO. 202-A

Dimensions of these two models are identical, the only difference is that No. 202-A is fabricated from aluminum.

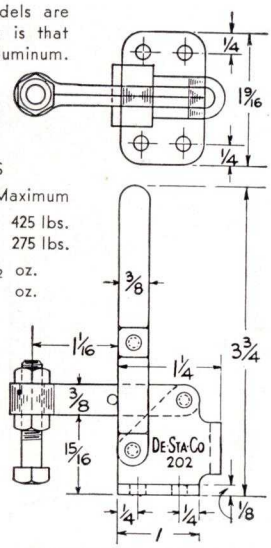

HOLDING PRESSURES

Model	Recommended	Maximum
No. 202	350 lbs.	425 lbs.
No. 202-A	200 lbs.	275 lbs.

Model 202 —Weight—5½ oz.
Model 202-A—Weight—3 oz.

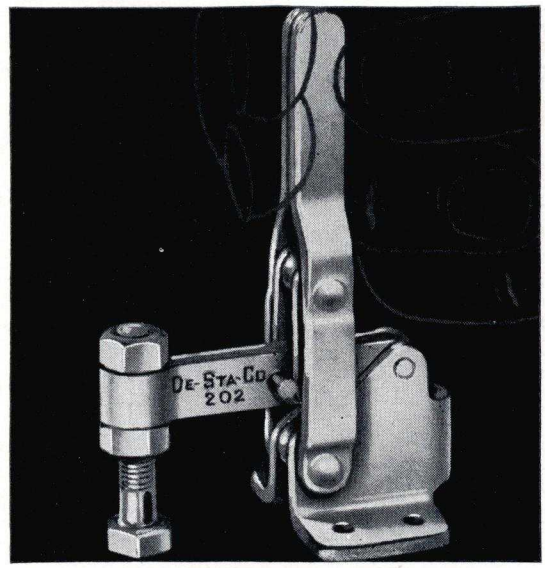

MODEL NO. 205

HOLDING PRESSURES

Recommended	Maximum
325 lbs.	400 lbs.

Weight—4 oz.

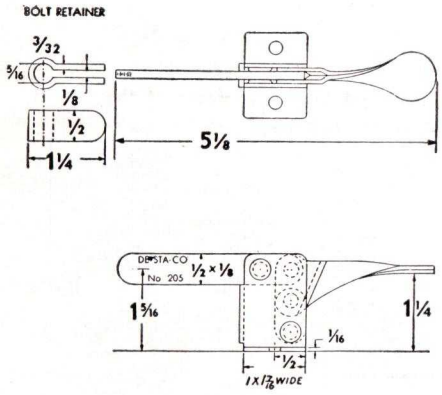

MODEL NO. 205-A

HOLDING PRESSURES

Recommended	Maximum
325 lbs.	400 lbs.

Weight—8 oz.

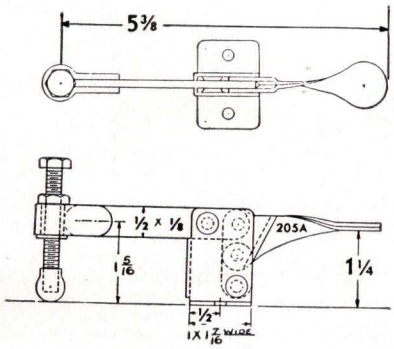

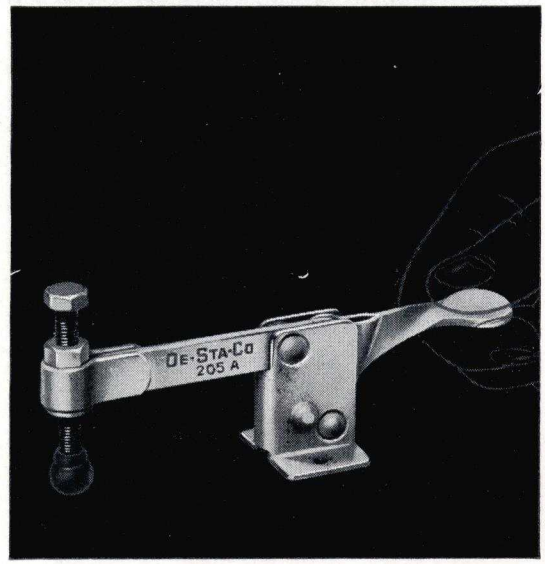

DE-STA-CO TOGGLE CLAMPS

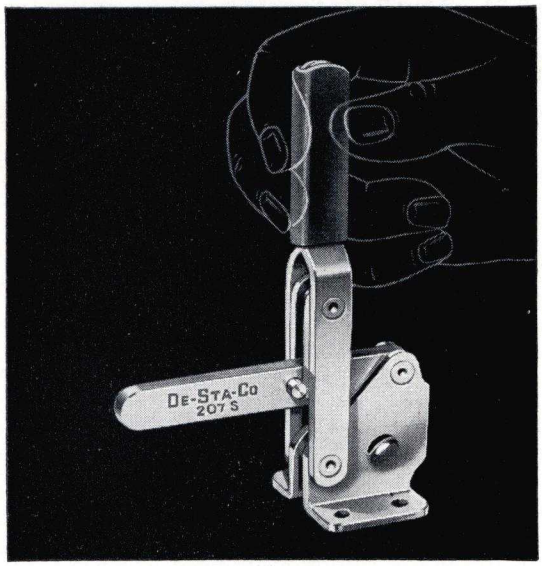

MODEL 207S

Dimensional length and location of "U" bar and "S" are alike.

HOLDING PRESSURES
Recommended 600 lbs. Maximum 650 lbs.
Weight—12 oz.

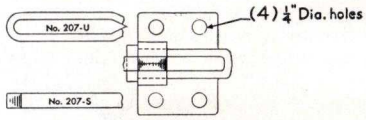

This model will be furnished with the 2 1/4" bar but may be had in 3 1/2" length in solid bar only—if specified.

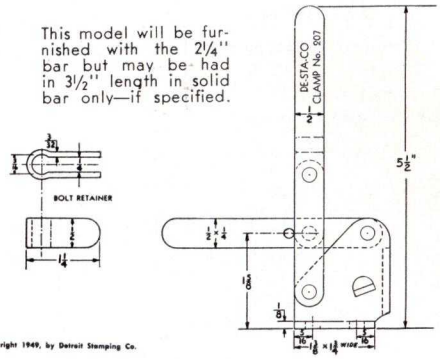

Copyright 1949, by Detroit Stamping Co.

Printed in U.S.A.

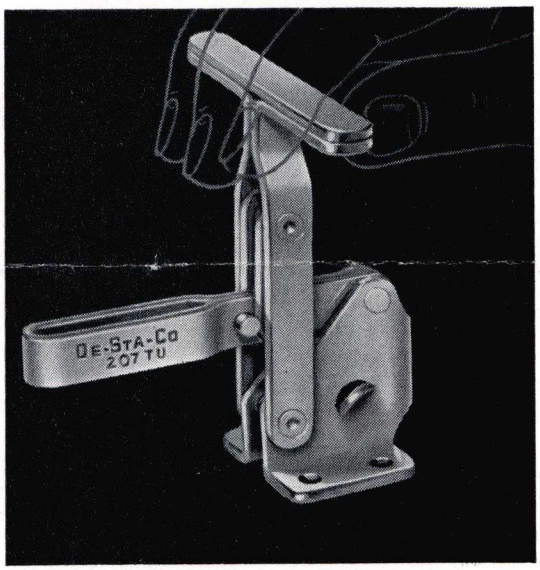

MODEL 207TU

Dimensional length and location of "U" bar and "S" are alike.

HOLDING PRESSURES
Recommended 375 lbs. Maximum 450 lbs.
Weight—12 oz.

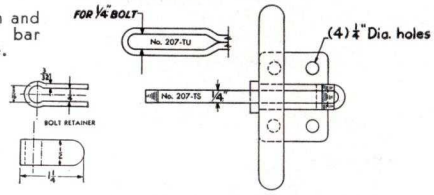

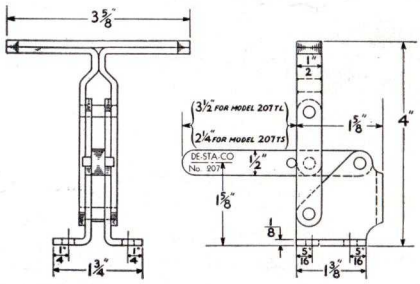

Copyright 1949, by Detroit Stamping Co.

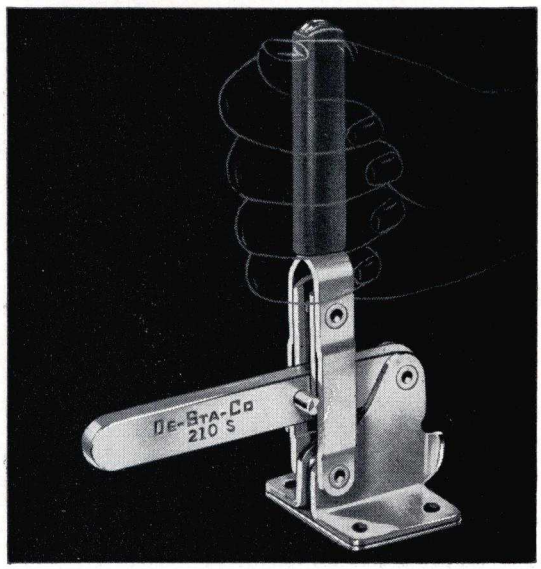

MODEL 210S

Dimensional length and location same as solid bar.

HOLDING PRESSURES
Recommended 775 lbs. Max. 825 lbs.
Weight—1 lb. 4 oz.

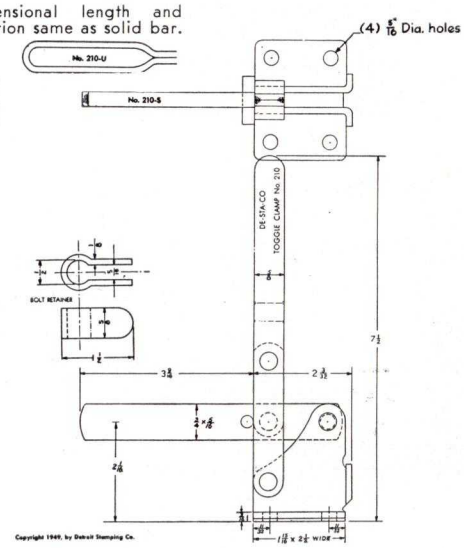

Copyright 1949, by Detroit Stamping Co.

DE-STA-CO TOGGLE CLAMPS

MODEL 210TS

Dimensional length and location of "U" bar and "S" are alike.

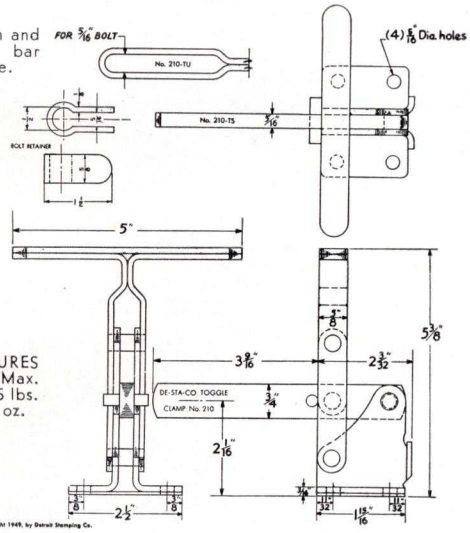

HOLDING PRESSURES
Recommended Max.
775 lbs. 825 lbs.
Weight—1 lb. 4 oz.

Copyright 1949, by Detroit Stamping Co.

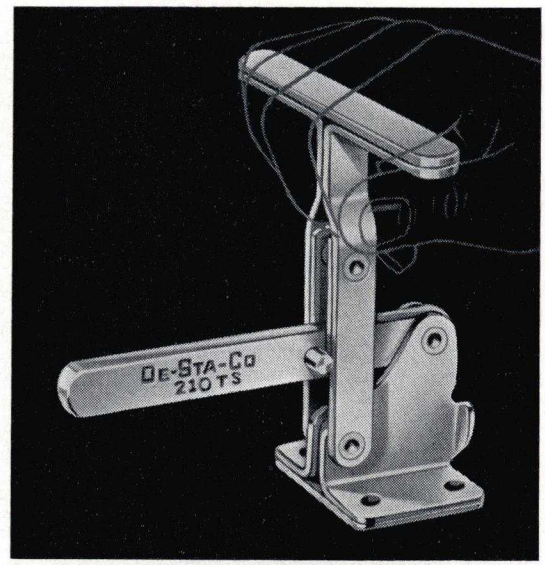

MODEL 220

HOLDING PRESSURES
Recommended Maximum
750 lbs. 800 lbs.
Handle Moves 60°
Bar Moves 95°

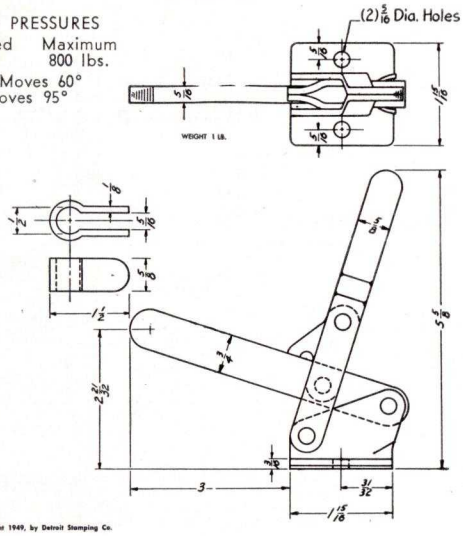

Copyright 1949, by Detroit Stamping Co.

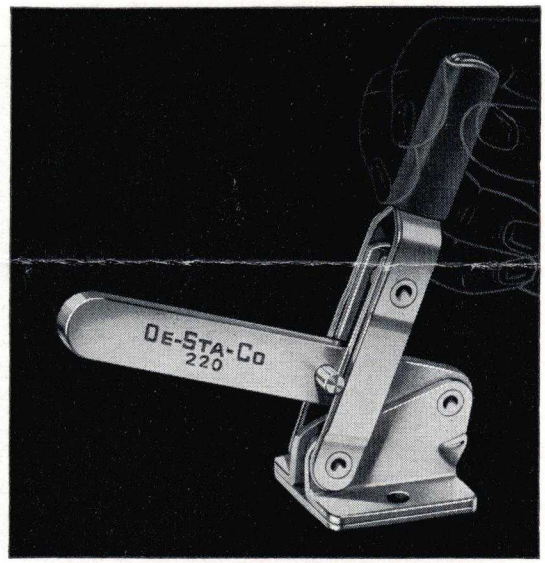

MODEL 228

HOLDING PRESSURE
Recommended Maximum
750 lbs. 800 lbs.
Weight—1 lb. 4 oz.

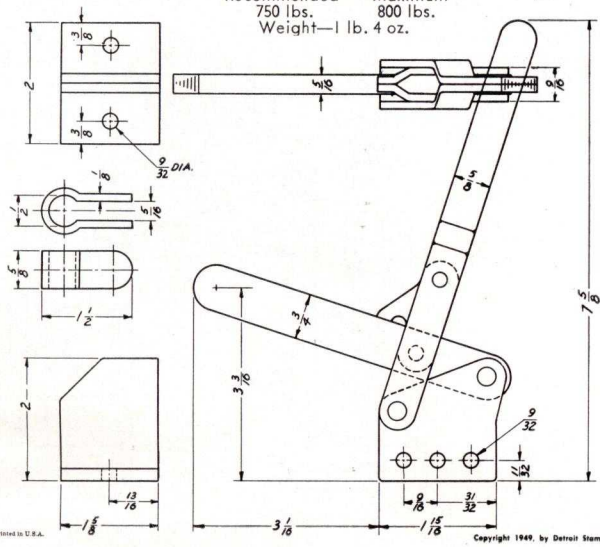

Printed in U.S.A.
Copyright 1949, by Detroit Stamping Co.

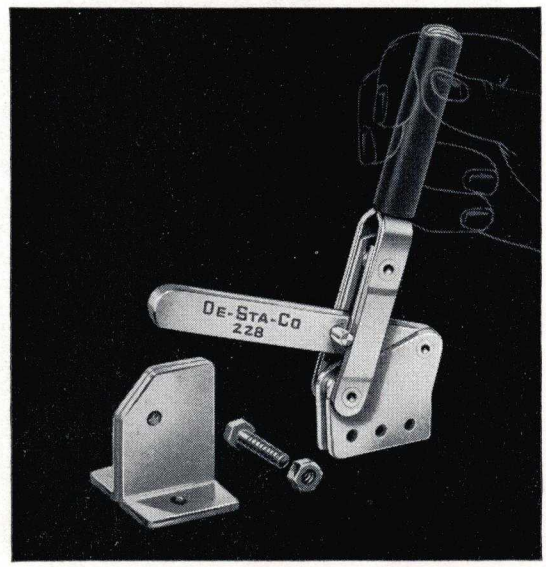

DE-STA-CO TOGGLE CLAMPS

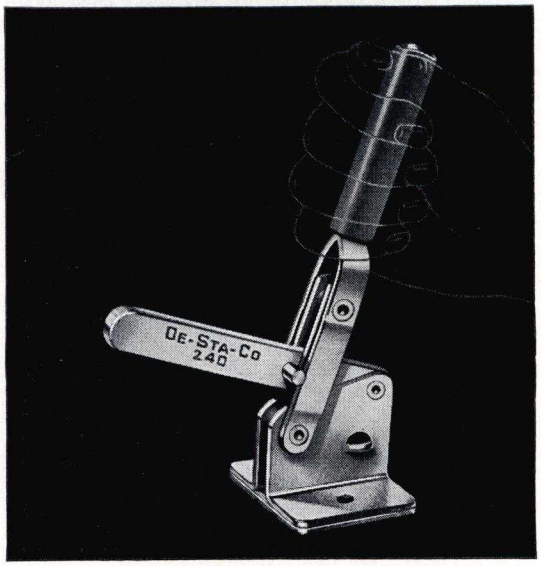

MODEL NO. 240

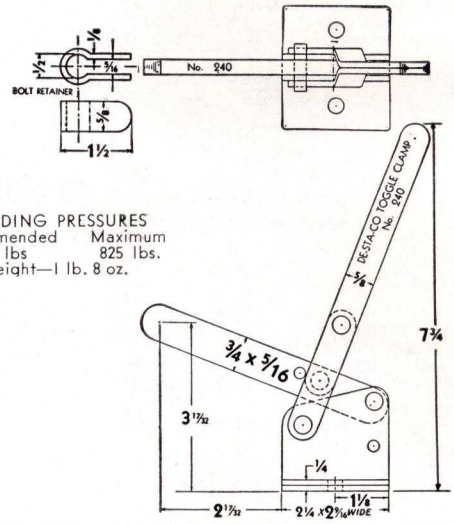

HOLDING PRESSURES
Recommended Maximum
775 lbs 825 lbs.
Weight—1 lb. 8 oz.

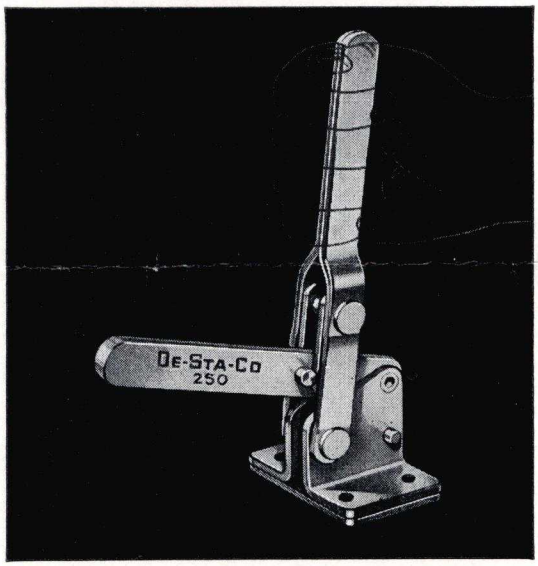

MODEL 250

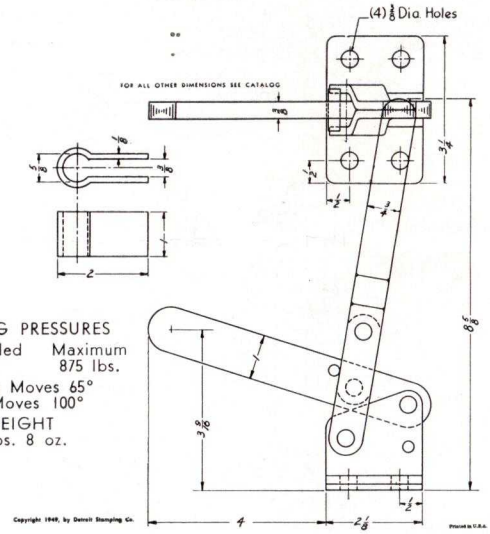

HOLDING PRESSURES
Recommended Maximum
825 lbs. 875 lbs.
Handle Moves 65°
Bar Moves 100°
WEIGHT
2 lbs. 8 oz.

Copyright 1949, by Detroit Stamping Co.

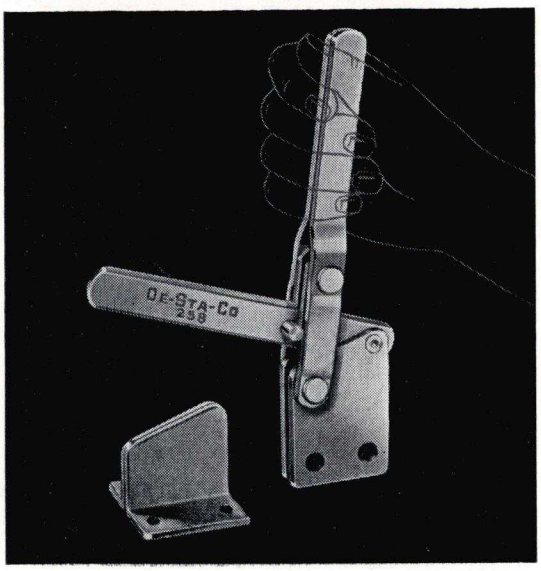

MODEL 258

HOLDING PRESSURES
Recommended Maximum
825 lbs. 875 lbs.
Handle Moves 105°
Bar Moves 190°
WEIGHT
2 lbs. 12 oz.

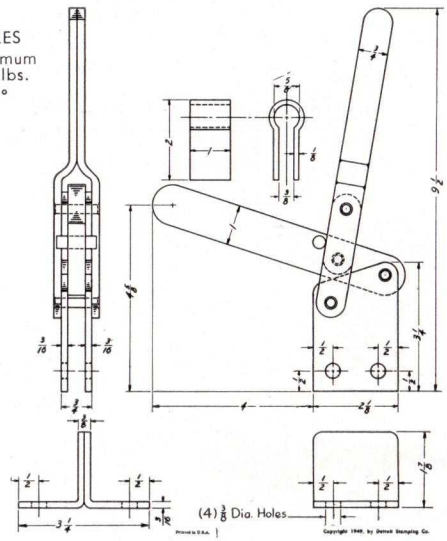

DE-STA-CO TOGGLE CLAMPS

MODEL 110C & 110CO

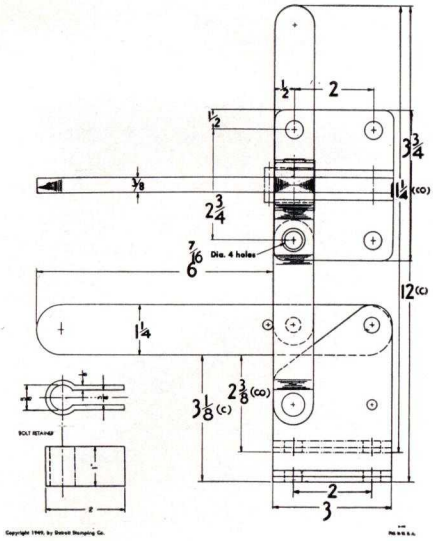

These two models are identical except that the center height of work bar on Model 110-C is $3\frac{15}{16}$'' and on Model 110-CO is $3\frac{3}{16}$''.

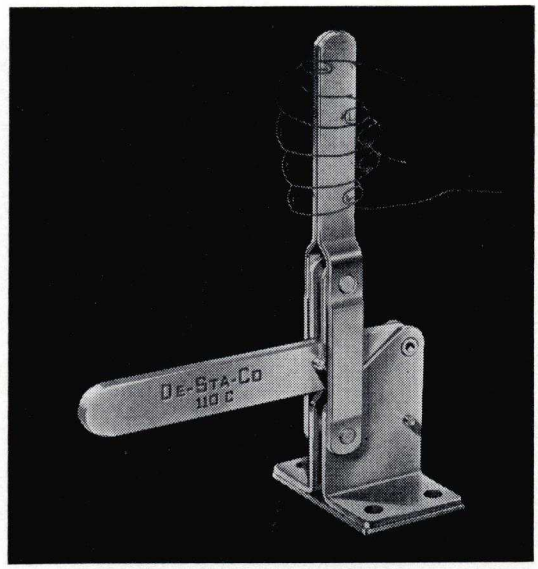

HOLDING PRESSURES

Model	Recom'ed	Maximum
110-C	1050 lbs.	1200 lbs.
110-CO	1050 lbs.	1200 lbs.

Model 110-C—
Weight—4 lbs. 8 oz.
Model 110-CO—
Weight—4 lbs. 8 oz.

MODEL 140

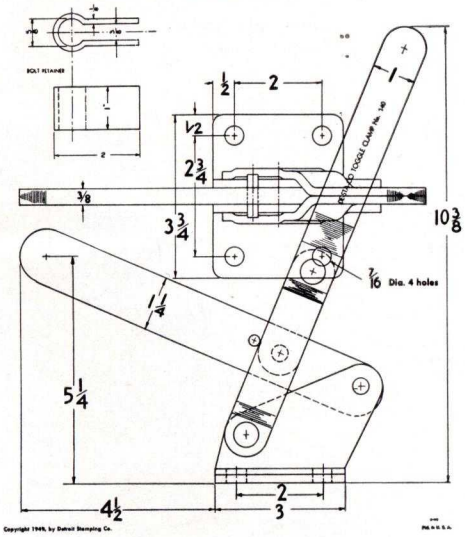

HOLDING PRESSURES

Recommended	Maximum
1050 lbs.	1200 lbs.

Weight—3 lbs. 8 oz.

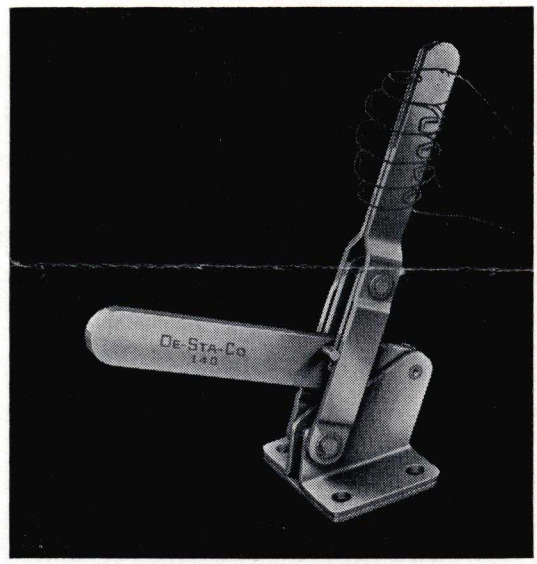

MODEL 340

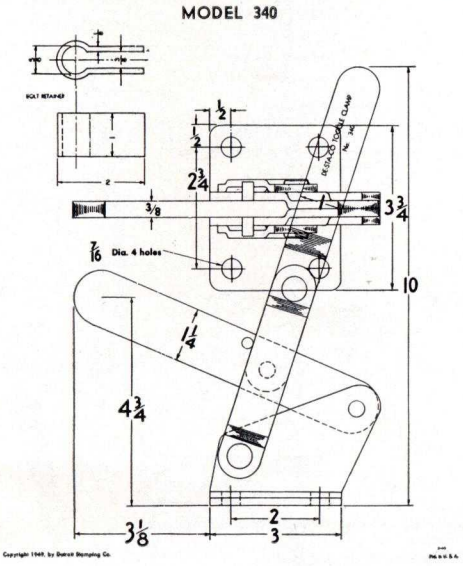

HOLDING PRESSURES

Recommended	Maximum
1450 lbs.	1600 lbs.

Weight—3 lbs.

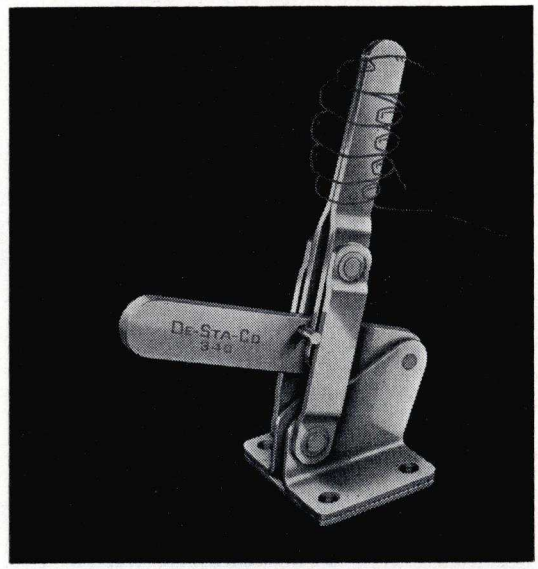

DE-STA-CO TOGGLE CLAMPS

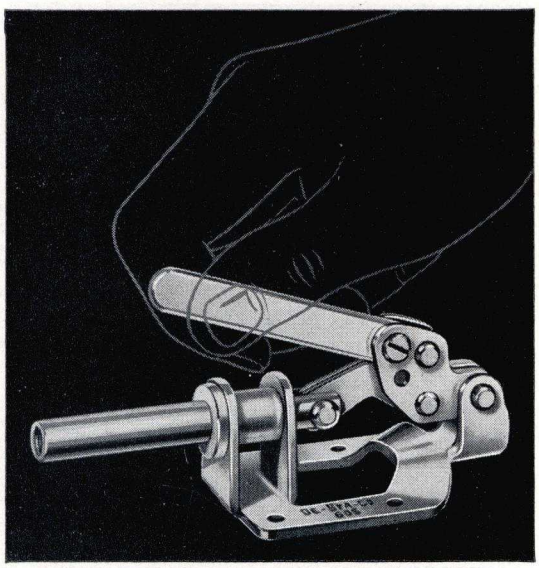

MODEL NO. 605
Weight—8 oz.

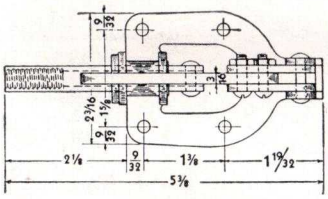

HOLDING PRESSURES

Recommended	Maximum
250 lbs.	300 lbs.

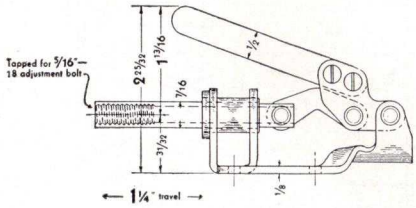

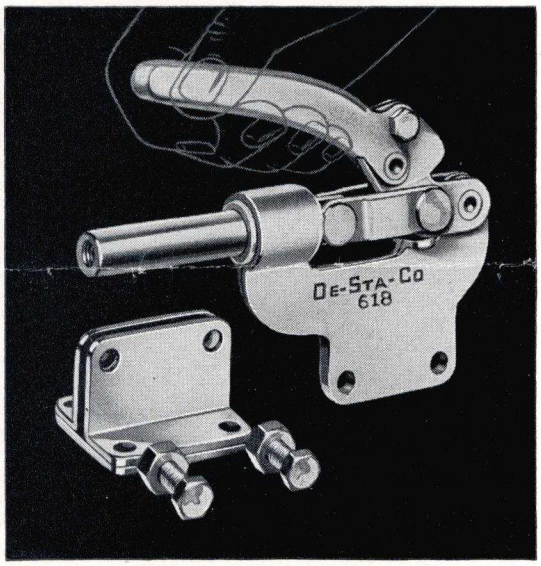

MODEL NO. 618
Weight—2 lbs.

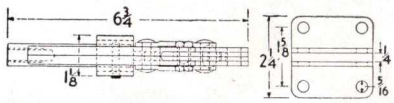

HOLDING PRESSURE
600 lbs.

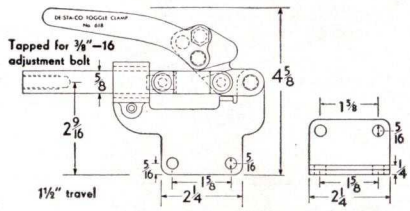

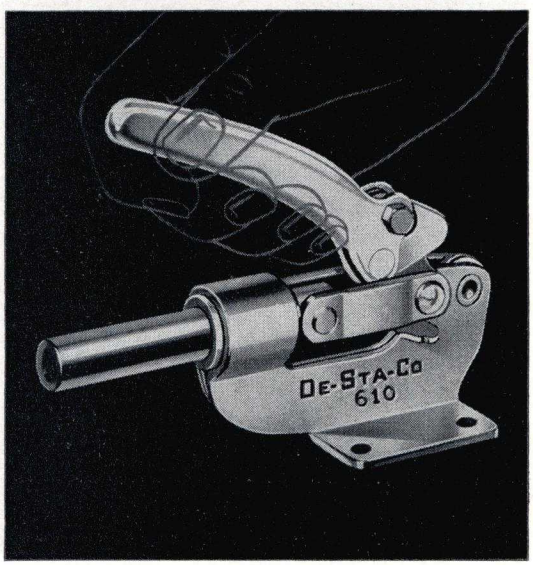

MODEL 610

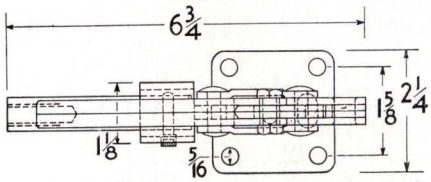

HOLDING PRESSURE
600 lbs.
Weight—1 lb. 8 oz.

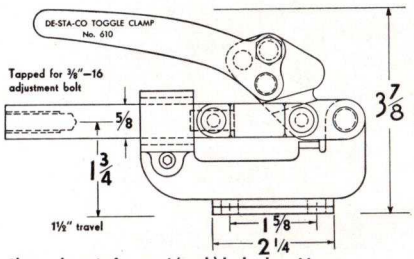

Shown here in forward (push) locked position.

Printed in U.S.A.
Copyright 1949, by Detroit Stamping Co.

DE-STA-CO TOGGLE CLAMPS

MODEL 620

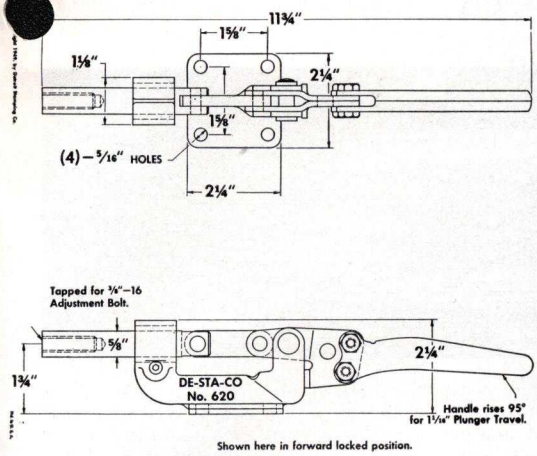

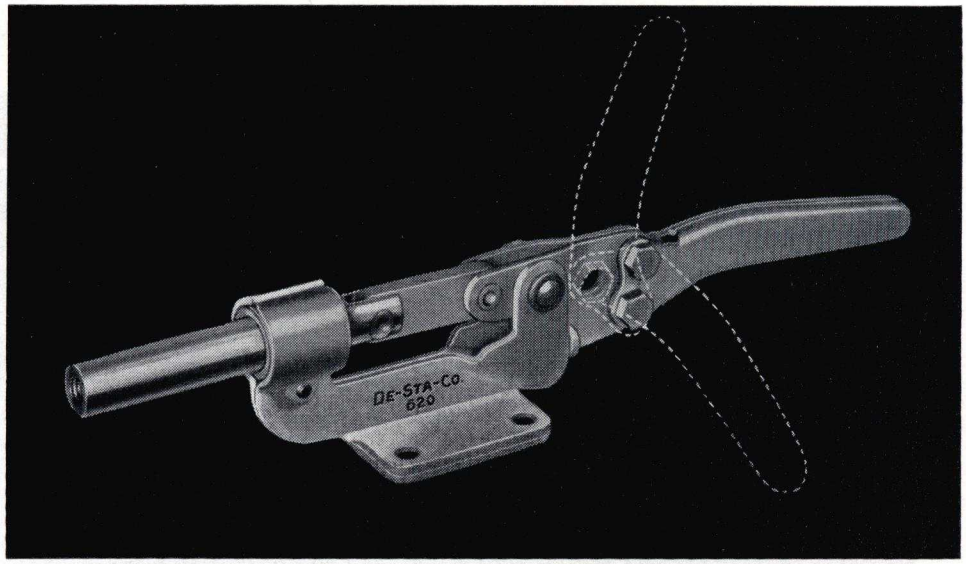

HOLDING PRESSURES

Recommended	Maximum
450 lbs.	600 lbs.

Weight—1 lb. 8 oz.

De-Sta-Co Toggle Tracing Templates help make work easier and will save much time at the drafting board. Two sizes—full-scale and half-scale—complete line De-Sta-Co clamps, giving both right- and left-hand views . . . available to engineers and draftsmen without charge.

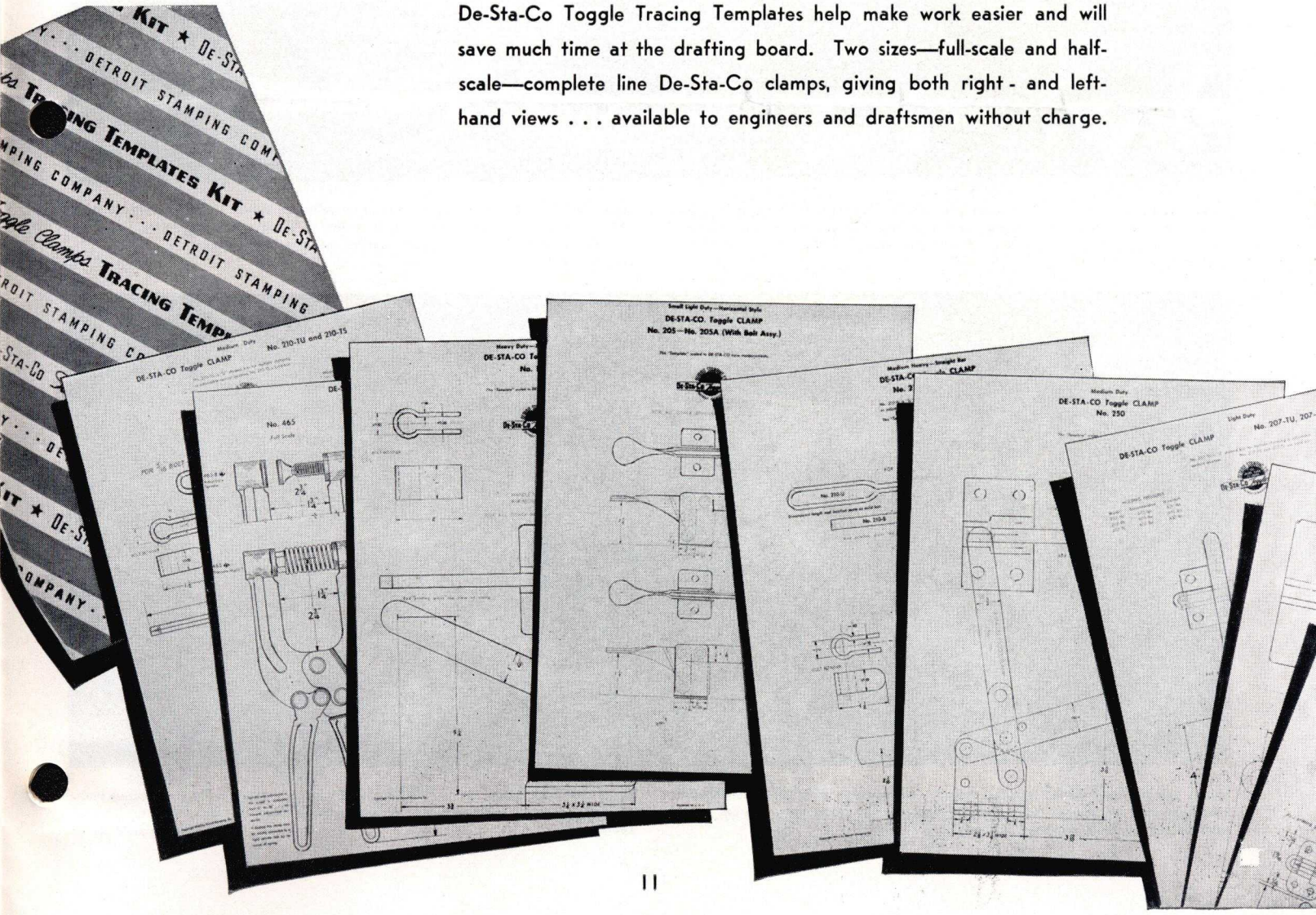

DE-STA-CO PORTABLE CLAMPS

Light Weight — Well Balanced

Model No. 464

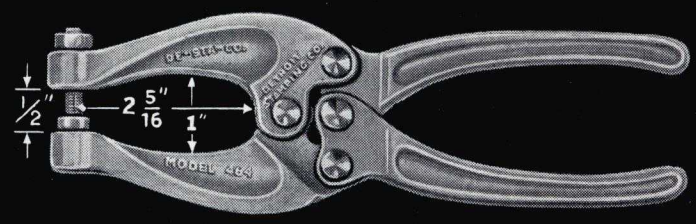

Model 464 is a small portable toggle clamp intended for use in restricted places. While the nose is narrow for entrance into small openings, the jaw width and depth are adequate for most sheet metal assembly processes. Adjustment for thickness of material up to 3/8" is made by turning the screw and locking. Grip is strong, firm, easy-acting for opening and closing.

The toggle lock action of De-Sta-Co Portable Clamps provides quick, positive holding pressure for drilling, riveting, gluing, welding and cementing. Particularly applicable to sheet metal work on ducts, cabinets, auto bodies and aircraft assemblies. Wearing surfaces hardened to stand up under severe production service; finish is cadmium plate.
Length 7 7/8".

Weight 18 oz.

Model No. 468 and Model No. 468-S

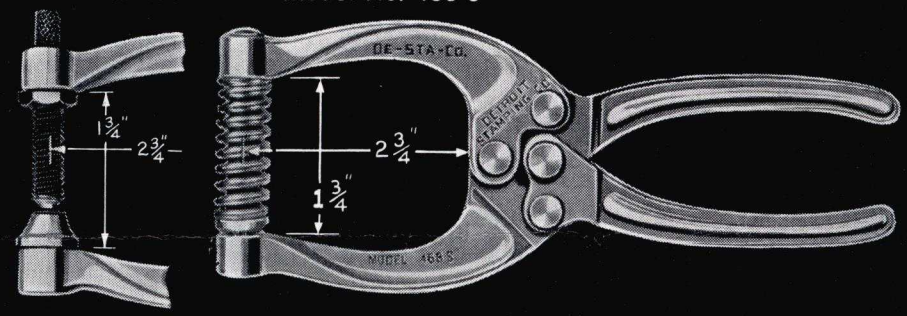

Model 468 portable clamp has greater jaw capacity than Model 464 above. Swivel-footed, copper plated thumb screws and lock nuts provide for angular clamping and quick adjustment up to 1 1/2" thickness. Generous throat dimension (see illustration).

Model 468-S portable clamp is equipped with De-Sta-Co Pressure-matic feature, which provides automatic spring adjustment of spindle gap up to 3/8" variation in material thickness. This makes manual adjustment infrequent.
Length 8 3/8"

Weight 20 oz.

Model No. 474 and Model No. 474-S

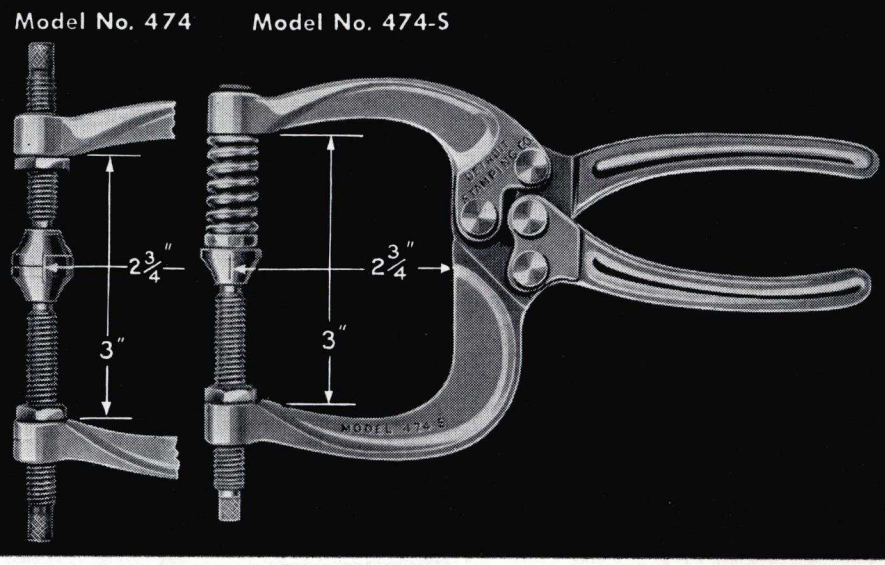

Model 474 portable clamp features extreme jaw opening of 2" between spindles. Thumb screws are copper plated, swivel-footed, with lock nuts. Throat dimensions ample for most assembly processes.

Model 474-S portable clamp, similar to **474** incorporates De-Sta-Co Pressure-matic feature for rapid self-adjustment to materials varying as much as 3/8".
Length 8 3/8"

Weight 22 oz.

DE-STA-CO TOGGLE CLAMP ACCESSORIES

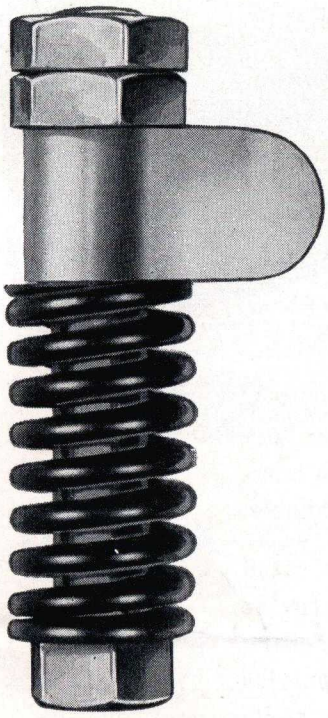

910 (Heavy Duty)

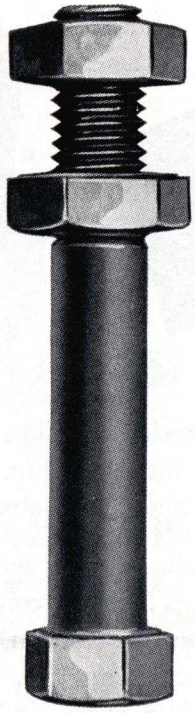

900104

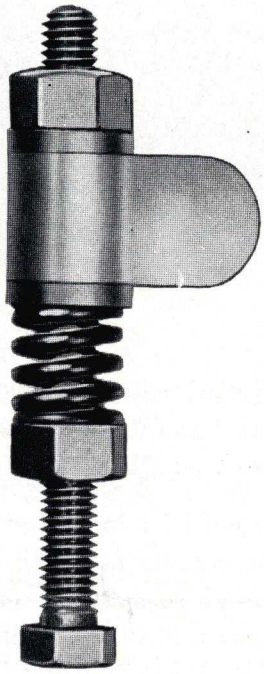

904
(Med. Duty)

900101

470118

205109

220113

205108

ADJUSTABLE HOLD-DOWN SPINDLES

Part Number	Description	Price
205109	1/4—28 x 2"	$0.15 each net
470118	3/8—16 x 3" Swivel Foot	.35 " "
900101	3/8—16 x 4"	.30 " "
900104	5/8—11 x 4"	.50 " "
904 (Medium Duty)	Pressure-Matic Bolt Retainer Assy. May be used with Clamps—210S—210TS, 215, 220, 228, 240, 245, 250, 258.	1.25 " "
910 (Heavy Duty)	Pressure-Matic Bolt Retainer Assy. May be used with Clamps 110C—110CO, 140, 340, 250, 258.	1.50 " "

Spring on 904 and 910 may be compressed 1/4 inch.

NEOPRENE CAPS FOR HOLD-DOWN SPINDLES

205108	For 1/4" Bolt	3.00 C Net
220113	For 3/8" Bolt	3.00 C Net

DE-STA-CO Shim STOCK

Steel or Brass from .001 to .015

(A)
SHEETS 6″ by 12″
Assorted 12 Thicknesses

(B)
ROLL 6″ by 120″

Made from selected materials, rolled to precision limits . . . carefully oiled to resist rust and stains . . . all stock is clean and free from burrs or ragged edges . . . DE-STA-CO is the finest shim stock available.

Neatly packaged in handy and durable cartons as illustrated above . . . two convenient styled packages . . . (A) contains twelve sheets of assorted thicknesses, .001 to .015, each sheet measuring 6″ by 12″ and each identified to indicate thickness . . . (B) contains a roll measuring 6″ by 120″ and is identified every six inches of its entire length to indicate thickness.

These packages are further distinctively labeled and plainly marked to indicate contents which allows for ease in storage and prevents waste and damage to stock.

PRICES: DE-STA-CO PACKAGED SHIM STOCK

Thicknesses			Rolls 6″ by 120″		Package of 12 Sheets, Size 6″ by 12″ Assorted, One Each of 12 Thicknesses.	
			Steel	Brass	Steel	Brass
.001	.0015		$2.75	$2.75	$3.00	$4.25
.002 .004	.003 .005		2.25	3.00		
.006	.007	.008	2.50	4.00		
.010	.012	.015	3.00	4.50		

ALL PRICES NET F. O. B. DETROIT, MICH.

DE-STA-CO FEELER STOCK

A precision product, essential for close tolerance work. Used for fitting pistons, valve tappet clearance, spark plug gaps, for inspection and production work where accuracy must be maintained.

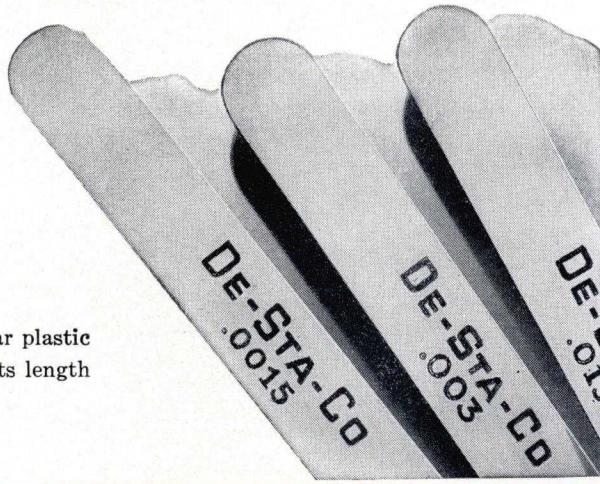

AVAILABLE IN 12 INCH STRIPS AND IN 25 FOOT COILS

STRIPS—12″ lengths are ½″ wide, rounded on both ends, each piece identified to indicate thickness. Each 12″ length is packed in moisture-proof, cellophane envelope, 12 pieces of a thickness to a box.

COILS—25 foot coils are packed in clear plastic case, each coil identified every 12″ of its length to indicate thickness.

PRICES: DE-STA-CO FEELER STOCK

Net F.O.B. Detroit, Michigan

Thicknesses	12″ Lengths	25 Foot Coils
.0015 .002 .003	35c each	$8.00 each
.004 .005 .006	25c each	6.00 each
.007 .008 .009 .010	20c each	5.00 each
.011 .012 .013 .015		

DE-STA-CO ARBOR SPACERS and SHIMS

SPACERS for fast, accurate spacing of Milling Cutters, Gang Saws, Slitters. for Gears, Bearings, etc.

PRICES per HUNDRED . . . See Quantity Discount Schedule Lower Left Hand Corner

SIZES ↓ / THICKNESS →		.001 .0015 .002	.003 .004	.005 .006	.007 .008 .010	.012 .015	.020 .025	.032 .047	.062 .093 .125		Complete Sets Contain One of Each Thickness	
Hole Diameter	Outside Diameter	Arbor Spacers	Shims	Arbor Spacers		Shims	Arbor Spacers	Shims	Arbor Spacers	Shims	Arbor Spacers	Shims
⅜	⅝	$8.50	$8.00	$7.50		$7.00	$7.00	$6.50	$8.00	$7.50	$1.20	$1.10
½	¾	9.00	8.50	8.00		7.50	7.50	7.00	8.50	8.00	1.30	1.20
⅝	1	10.50	10.00	9.50		9.00	10.50	10.00	12.50	12.00	1.60	1.50
¾	1⅛	12.50	12.00	10.00		9.50	11.50	11.00	14.50	14.00	1.80	1.70
⅞	1⅜	14.50	14.00	10.50		10.00	12.50	12.00	15.50	15.00	1.95	1.85
1	1½	14.50	14.00	11.00		10.50	13.00	12.50	16.50	16.00	2.00	1.90
1⅛	1⅝	15.50	15.00	11.50		11.00	13.50	13.00	17.50	17.00	2.10	2.00
1¼	1¾	15.50	15.00	11.50		11.00	13.50	13.00	17.50	17.00	2.10	2.00
1⅜	1⅞	16.50	16.00	12.50		12.00	15.50	15.00	20.50	20.00	2.35	2.25
1½	2¼	17.00	16.50	13.00		12.50	16.50	16.00	22.50	22.00	2.50	2.40
1⅝	2½	23.50	23.00	14.50		14.00	21.50	21.00	30.50	30.00	3.15	3.05
1¾	2¾	26.50	26.00	15.50		15.00	24.00	23.50	35.50	35.00	3.55	3.45
1⅞	2⅞	29.50	29.00	17.50		17.00	28.50	23.00	40.50	40.00	4.05	3.95
2	3	29.50	29.00	18.50		18.00	30.50	30.00	42.50	42.00	4.20	4.10
2¼	3¼	35.50	35.00	19.50		19.00	32.50	32.00	45.50	45.00	4.65	4.55
2½	3¾	36.50	36.00	20.50		20.00	33.50	33.00	48.50	48.00	4.85	4.75
2¾	4	38.50	38.00	22.50		22.00	35.50	35.00	50.50	50.00	5.15	5.05
3	4⅜	40.50	40.00	24.50		24.00	36.50	36.00	52.50	52.00	5.40	5.30
3½	4¾	40.50	40.00	26.50		26.00	38.50	38.00	55.50	55.00	5.70	5.60
4	5½	44.50	44.00	28.50		28.00	41.50	41.00	66.50	66.00	6.30	6.20

When ordering kindly specify which type required.

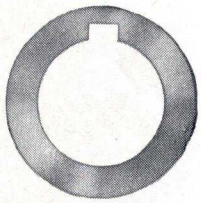

ARBOR SPACERS
Keywayed

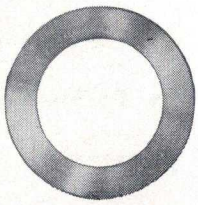

SHIMS
No Keyway

Arbor Spacers are all Keywayed—Shims are not Keywayed. All sizes shown are carried in stock . . . Transportation charges prepaid.

QUANTITY DISCOUNT ON ARBOR SPACERS AND SHIMS

Discounts apply to quantity packages, all of one size and of one thickness, each of like dimensions.

1 to 24 Net—No Discount
25 to 99.....25% 250 to 499.....50%
100 to 249.....40% 500 up ... .60%

DETROIT STAMPING CO.

Finished Products Division

340 MIDLAND AVENUE **DETROIT 3, MICHIGAN**

PRINTED IN U.S.A.

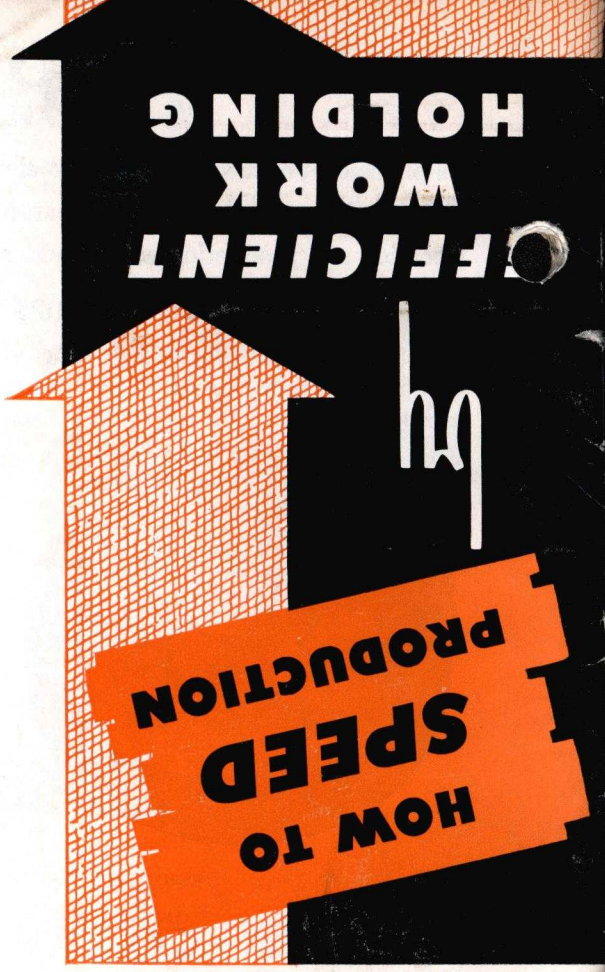

DETROIT STAMPING COMPANY
340 Midland Ave. • Detroit 3, Mich.

For Your Convenience

• Complete stock of De-Sta-Co Toggle Clamps is carried by De-Sta-Co distributors in principal industrial centers across the Nation.

ALABAMA
Dixie Type & Supply Co.
1712 Warrior Road
Birmingham 8

CALIFORNIA
Norman S. Wright & Co.
425 S. Western Avenue
Los Angeles 5

Norman S. Wright & Co.
2779 Folsom Street
San Francisco 10

GEORGIA
Pye-Barker Supply Co.
231 Pryor St., S.W.
Atlanta 3

ILLINOIS
George A. Rieke Company
549 W. Washington Street
Chicago 6

INDIANA
General Supply & Tool Co.
140 South Senate Avenue
Indianapolis 4

KANSAS
H-H Tool & Supply Company
105 West Second Street
Wichita 2

MASSACHUSETTS
F. H. Roberston Co., Inc.
420 Broadway Avenue
Malden 48

MISSOURI
Ernst Machinery Company
5531½ Troost Avenue
Kansas City 4

NEW YORK
Acme-Danneman Co., Inc.
203 Lafayette Street
New York 12

Root-Neal Company
64 Peabody Street
Buffalo 10

Fink Tool Company
358 Averill Avenue
P.O. Box 681
Rochester 7

M. J. Kelly Supply Co.
323 East Water Street
Syracuse

OHIO
F. N. Cuthbert, Inc.
2909 Detroit Avenue
Toledo 10

Die Supply Company
5345 St. Clair Avenue
Cleveland 14

Die Supply Company
915 Valley Street
Dayton 4

OREGON
Norman S. Wright & Co.
1238 N. W. Glisan Street
Portland 9

PENNSYLVANIA
Mr. Paul J. Fleming
5918 N. Seventh Street
Philadelphia 20

TENNESSEE
Mr. Ralph Landrum
1107 Granada
Nashville 6

Lewis Supply Company
477 South Main Street
Memphis 2

TEXAS
Tool Supply & Engineering Co.
1901 Canton Street
Dallas 1

WASHINGTON
Norman S. Wright & Co.
233 Ninth Avenue, North
Seattle 9

WISCONSIN
Triplex Supply Company
830 N. Third St.
Milwaukee 2

ONTARIO
Williams & Wilson Ltd.
11 Front Street, East
Toronto 1

Williams & Wilson Ltd.
301 Security Building
Windsor

QUEBEC
Williams & Wilson Ltd.
544 Inspector Street
Montreal

DETROIT STAMPING COMPANY
340 MIDLAND AVENUE • DETROIT 3, MICHIGAN

DE-STA-CO *TOGGLE* CLAMPS

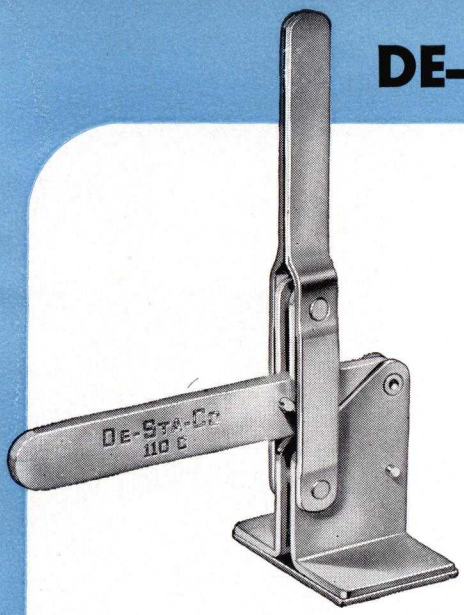

MODEL 110-C
Overall Height 12⅛″
Maximum Holding
Pressure 1200 lbs.

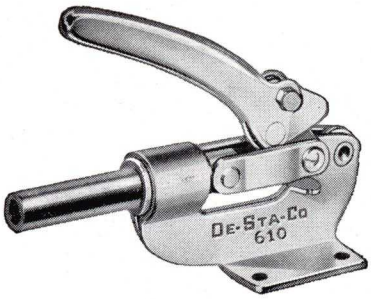

MODEL 610
Overall Height 3⅝″
Maximum Holding
Pressure 600 lbs.

MODEL 240
Overall Height 7¾″
Maximum Holding
Pressure 825 lbs.

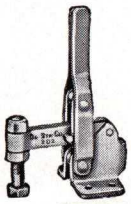

MODEL 202
Overall Height 3¾″
Maximum Holding
Pressure 425 lbs.

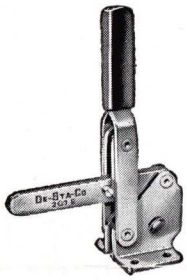

MODEL 207-S
Overall Height 5½″
Maximum Holding
Pressure 650 lbs.

MODEL 210-TU
Overall Height 5⅜″
Maximum Holding
Pressure 650 lbs.

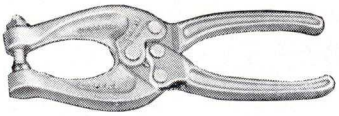

MODEL 464
Overall Length 8″
Maximum Holding
Pressure 350 lbs.

The complete De-Sta-Co line—more than three dozen toggle clamps—ranges in size from small clamps for portable fixtures to massive heavy duty clamps of over 2000 pounds holding pressure. Portable "plier" clamps with Pressure-Matic or screw adjustment features are increasingly in demand.

De-Sta-Co Toggle Clamps are accurately built, all holes reamed to size to insure continued uniformity of operation and for long life in production. Accessories for adapting them to parts and fixtures are available, and most models may be revamped to fit specific requirements. For the right clamp to solve your production clamping problem, see the complete details in Catalog No. 49.

DETROIT STAMPING COMPANY
Established Over 30 Years
340 MIDLAND AVE. * DETROIT 3, MICH.

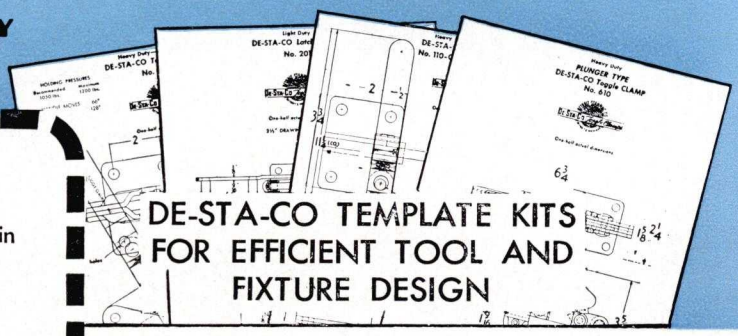

DE-STA-CO TEMPLATE KITS FOR EFFICIENT TOOL AND FIXTURE DESIGN

Please send information on De-Sta-Co Toggle Clamps.

☐ Catalog ☐ Portable Clamp Bulletin

☐ Have representative call.

Template Kit
☐ Full Scale ☐ Half Scale

Company name_____

Attention of_____ Title_____

City_____ Zone____ State_____

PROMPT DELIVERY FROM STOCK—
Mail coupon to:

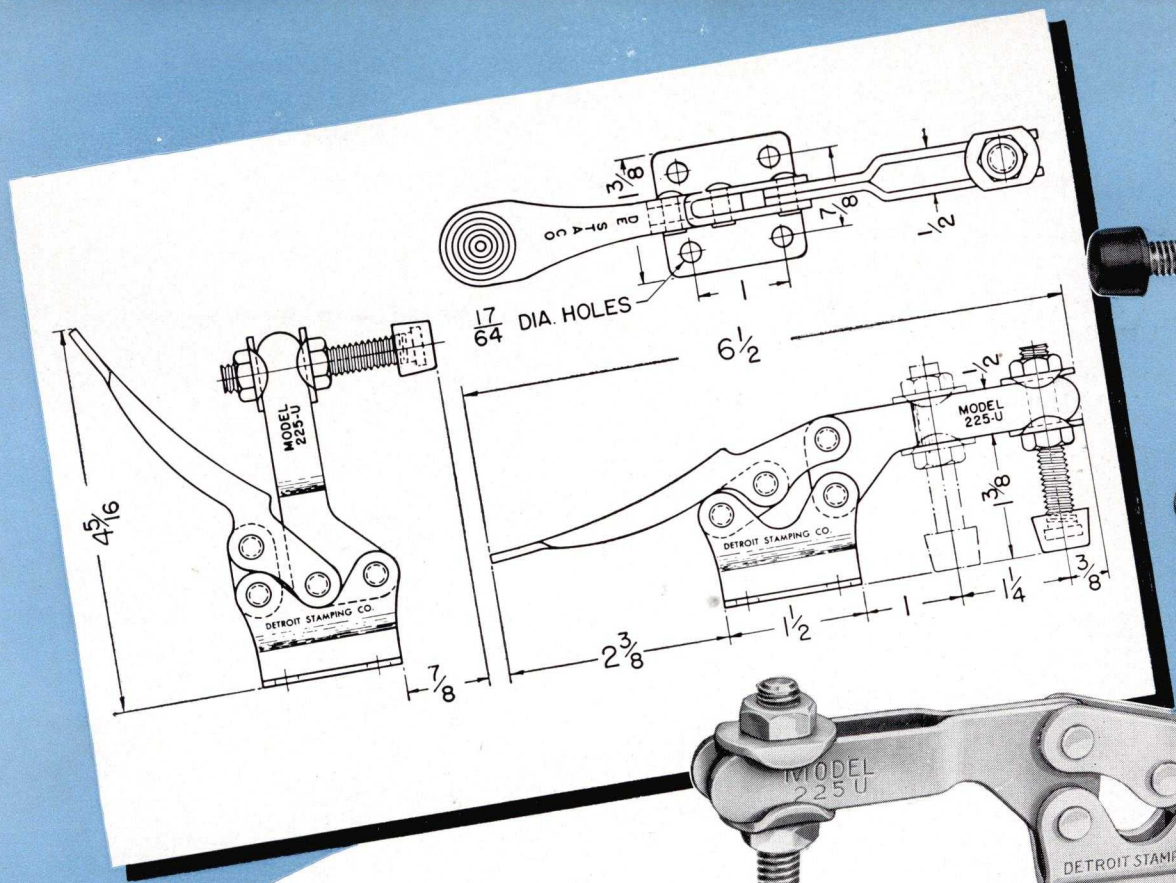

Speed Production With This New DE-STA-CO Toggle Clamp

This new De-Sta-Co Model 225-U Toggle Clamp speeds machining, inspection, assembly, welding and many other operations.

Smooth, fast, powerful action clamps parts quickly . . . holds them firmly in perfect alignment . . . releases rapidly. Clamping bar retracts to fully vertical position away from work, allowing maximum clearance for quick removal of finished work piece and insertion of new one. Rubber tipped bolt assembly is adjustable both horizontally and to work height to simplify fixture design.

Other features of this new De-Sta-Co Clamp include stainless steel bearings, reamed working surfaces and rugged, dependable construction. Find out now, how to cut fixture costs and increase your production with the versatile Model 225-U De-Sta-Co Toggle Clamp. To obtain complete information from your local De-Sta-Co representative, mail coupon on reverse side.

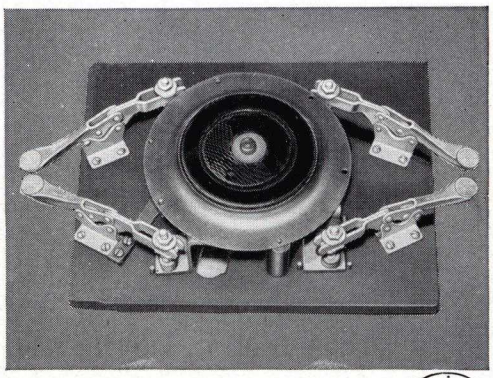

Locates brackets to flange in light, simple spot-welding fixture.

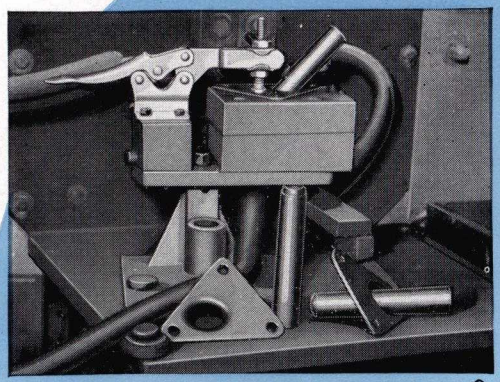

Rapid clamping action—instant precision alignment—mean uniform high production on induction brazing of two-piece assembly.

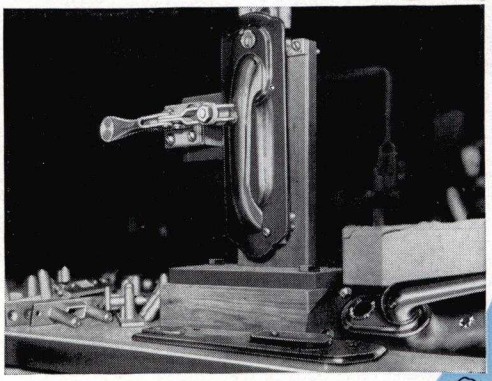

Quickly positions and holds house trailer door lock firmly during assembly and final inspection.

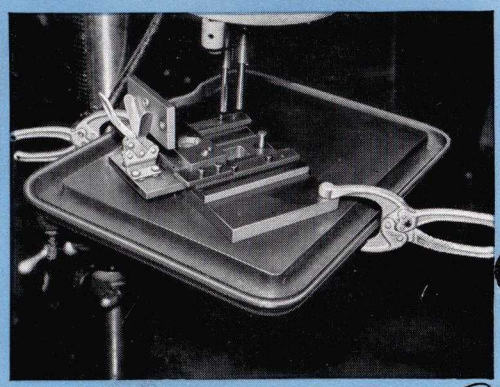

Combination clamping, locating and actuating device on sliding drilling and reaming fixture.

TELEPHONES:
TOWNSEND 8-5080

CABLE ADDRESS "DESTACO"
WESTERN UNION CODE

PRICE LIST

DETROIT STAMPING COMPANY

• *FINISHED PRODUCTS DIVISION* •

340 MIDLAND AVENUE
DETROIT 3, MICHIGAN

—

PRICE LIST

—

September 1, 1949

—

"DE-STA-CO" TOGGLE CLAMPS

MODEL	1-49	50-249	250
110-C	$7.50	$5.65	$4.90
110-CO	7.50	5.65	4.90
140	7.50	5.65	4.90
201	2.75	2.05	1.80
202-202-T	2.25	1.70	1.50
205	1.75	1.30	1.15
205-A (with bolt assy.)	2.00	1.50	1.30
207-S & U (TS & TU)	2.65	2.00	1.75
207-L	2.75	2.05	1.80
208	2.65	2.00	1.75
210-S & U (TS & TU)	3.85	2.90	2.55
211	3.75	2.80	2.50
215	3.00	2.25	2.00
220	3.35	2.50	2.20
225-U	2.75	2.05	1.80
228	3.75	2.80	2.50
240	3.85	2.90	2.55
245	3.65	2.75	2.40
250	4.75	3.55	3.15
258	5.20	3.90	3.45
340	7.50	5.65	4.90
605	3.25	2.45	2.15
610	5.00	3.75	3.30
618	5.50	4.15	3.65
620	5.00	3.75	3.30
628	5.50	4.15	3.65
640	19.50	17.50	16.00

Bolt Retainers supplied with each clamp without additional charge

904	1.25	Pressure-Matic Accessories (Any Quantity)
910	1.50	

"DE-STA-CO" PORTABLE CLAMPS

MODEL	1-49	50-249	250
464	3.75	3.20	2.90
468	4.50	3.85	3.50
468-S	4.50	3.85	3.50
474	5.25	4.45	4.00
474-S	5.25	4.45	4.00

F.O.B. DETROIT